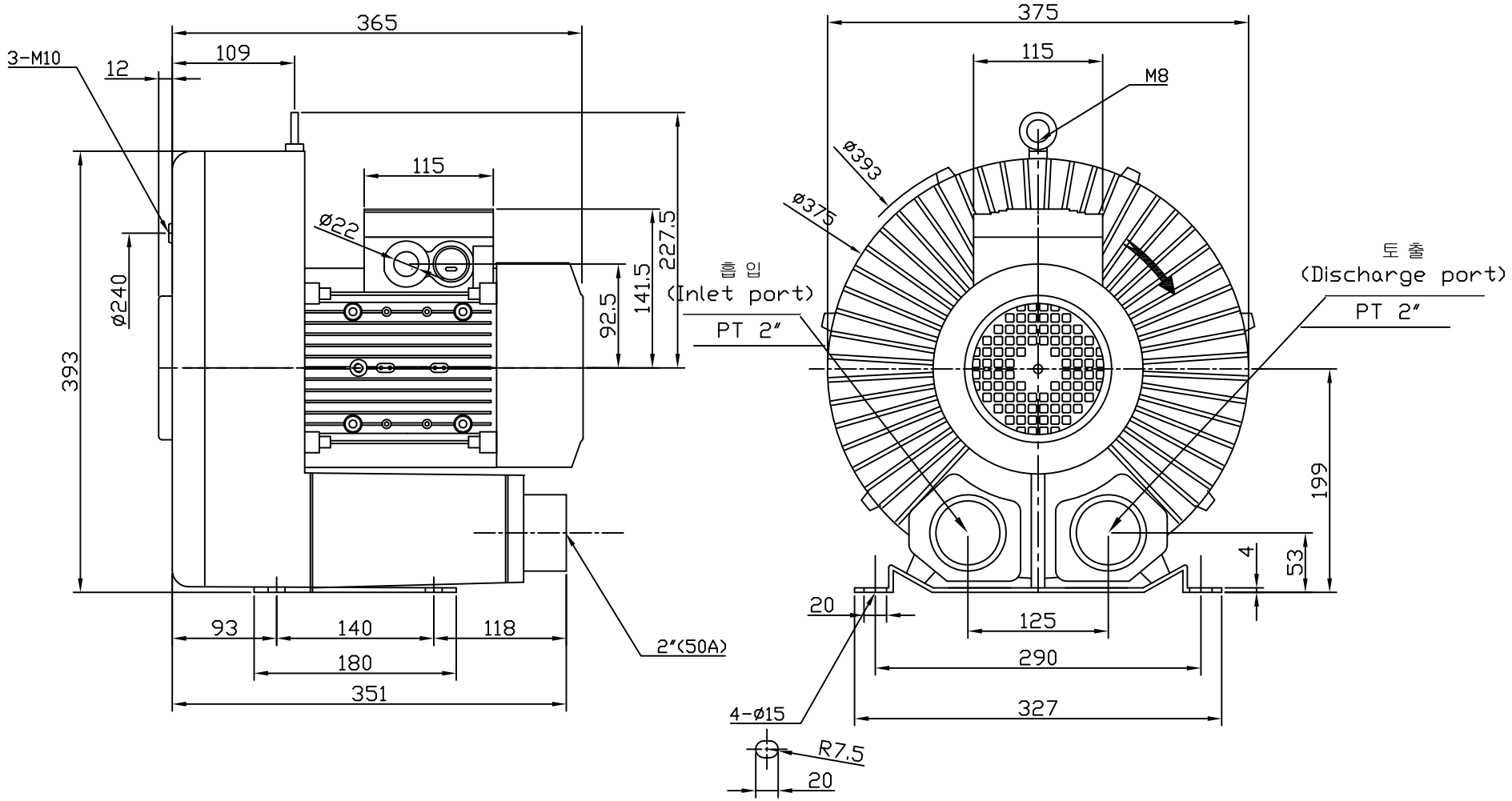

DATE	MARK	REMARK	DSGN	CHK	APRD

TYPE
RING BLOWER(Reg.Blower)
IHB-600H

APPROVED	CHECK	DESIGN	DRAWN

IN HA ELECTRIC

DWG.NAME
OUTLINE DIMENSION

THIRD ANGLE PROJECTION	SCALE	N/S	DATE 14.06.18

REF. DWG. NO. 3ø3.0kw2p

DWG. NO. 0600H003